Memorial Sloan Kettering Cancer Center

PATIENT & CAREGIVER EDUCATION

About Your PET-CT with FDG Tracer

This information will help you get ready for your positron emission tomography (PET) computed tomography (CT) scan with FDG tracer at MSK.

About your PET-CT with FDG tracer

A PET-CT scan is an imaging procedure that is used to:

- Find cancer cells.
- Plan your treatment.
- See how your treatment is working.

You'll have a CT scan with a low dose of radiation at the same time as your PET scan. CT scans take a fast series of X-ray pictures. They're combined with your PET scan to create pictures of your soft tissues and bones.

You may also be scheduled for a diagnostic CT at the same time as your PET-CT. A diagnostic CT lets your healthcare provider learn more about your tissues, bones, and blood vessels. Ask your

healthcare provider for the resource *Computed Tomography (CT) Scan* (www.mskcc.org/pe/ct-scan) to help you get ready.

Tracer

You'll get a radioactive medicine called a tracer before your PET-CT. The tracer is attached to a substance your cells and tissues use. Cancer cells do not use the substance the same way as healthy cells. The radioactive part of the tracer lets your healthcare provider see how your cells use the substance. This helps them find cancer cells.

The tracer doesn't stay in your body long. It leaves your body mainly through your urine.

You will get the tracer through an intravenous (IV) line we place in your arm or hand. If you have a central venous catheter (CVC), we will only use it for the tracer if we cannot place an IV for any reason. This is because the PET-CT images are clearer if you get the tracer through an IV.

Your PET-CT will use FDG as the tracer.

Oral contrast

You will get oral contrast to drink before your scan. You'll be asked if you're allergic to iodinated contrast when you check in for your appointment. You'll get one of the following oral contrast solutions:

- Iodinated contrast (contrast with iodine)
- Diluted barium sweetened with saccharin

Both types of contrast work the same way and are used for the same purpose. Both are safe if you have diabetes.

You'll need to start drinking the oral contrast 45 to 60 minutes before your PET-CT. This will give the contrast solution time to move through your body.

Reactions to oral contrast

Side effects of oral contrast may include:

- Diarrhea (loose or watery bowel movements) if you got iodinated contrast.
- Constipation (having fewer bowel movements than usual) if you got barium contrast).
- Feeling warm.
- Having a metallic taste in your mouth.
- Upset stomach or vomiting (throwing up).
- Headaches.

Getting ready for your PET-CT with FDG tracer

Breastfeeding and pregnancy

Tell your healthcare provider if you're pregnant or breastfeeding. This will help them plan your care.

Diabetes care

If you have diabetes, talk to your doctor who ordered your test. They will tell you how to manage your medicine before your PET-CT.

Take devices off your skin

You may wear certain devices on your skin. Before your procedure, surgery, or scan, some device makers recommend you take off your:

- Continuous glucose monitor (CGM)
- Insulin pump

Talk with your healthcare provider about scheduling your appointment closer to the date you need to change your device. Make sure to bring an extra device with you to put on after your procedure, surgery, or scan.

You may not be sure how to manage your glucose (blood sugar) while your device is off. If so, before your appointment, talk with the healthcare provider who manages your diabetes care.

Remove jewelry

Jewelry can make the images from your scan harder to read. Certain metals can also heat up and cause burns during your scan. Tell a member of your care team if you cannot remove your jewelry before the day of your scan.

What to do the day before your PET-CT with FDG tracer

Avoid doing some activities the day before

For 24 hours before your scan, avoid activity that uses a lot of energy or makes you repeat motions. This includes running, jogging, or cycling. These activities can lower the quality of the images from your PET-CT.

Stay warm

It's important to stay warm the day before and the day of your scan. When you get cold, it affects a special type of fat. Staying warm will keep the fat from making it harder for your radiologist to get clear images from your PET-CT. A radiologist is a doctor with special training in using imaging to diagnose and treat disease.

Follow these instructions:

- Avoid areas where you may become too cold.
- Keep your hands and feet warm at all times.
- In the winter, dress extra warmly. Wear hats, scarves,

gloves, and extra layers.

- In the summer, avoid turning on your air conditioner very high.
- Bring a sweater with you to your appointment.

If you're getting anesthesia (A-nes-THEE-zhuh), read the "For people getting anesthesia" section at the end of this resource. Anesthesia is medicine to numb you or make you sleep.

What to do the day of your PET-CT with FDG tracer

Avoid activity that uses a lot of energy or makes you repeat motions until after your scan.

If you are not getting anesthesia, follow the instructions below. You may not be able to have your PET-CT if you do not follow these instructions before your procedure.

For 6 hours before you arrive for your scan:

- Do not eat anything.
- Do not chew gum or suck on hard candy, mints, or cough drops.
- You may drink only water.
- Take only the medicine your doctor told you to take the

morning of your procedure. Take them with water only.

If you are getting anesthesia, read the “For people getting anesthesia” section at the end of this resource.

What to expect when you arrive

Many staff members will ask you to say and spell your name and birth date. This is for your safety. People with the same or similar names may be having a procedure on the same day. Once you’re in the department, you’ll fill out a brief questionnaire.

Your care team will prick your finger or draw blood from your arm to measure your blood glucose (sugar). It is measured in milligrams per deciliter (mg/dL). Your blood sugar level needs to be between 70 mg/dL and 199 mg/dL.

If your blood sugar level is 200 mg/dL or above, you may need to get insulin. Your scan may need to be rescheduled if your blood sugar level is above 200 mg/dL or below 70 mg/dL.

Your care team will inject the tracer into your vein. You’ll wait about 60 minutes (1 hour) for your body to absorb the tracer. The amount of time depends on which area of your body will be scanned. You will also get contrast to drink at this time.

Try to relax and limit your movement during this time. You

can sleep, read, listen to music, or watch videos while you're waiting. Ask for a blanket if you feel cold.

If you're having a brain PET-CT, it's important to limit brain activity before your scan. Your nurse may tell you not to read or listen to music while you're waiting for your scan.

Your care team will ask you to urinate (pee) just before your scan.

During your PET-CT with FDG tracer

When it's time for your scan, your technologist will bring you to the scanning room. They will help you onto the scanning table.

The machine looks like a large doughnut with a hole in the middle (see figure 1). This is the scanning ring (scanner). The scanner is about 3 feet (1 meter) deep.

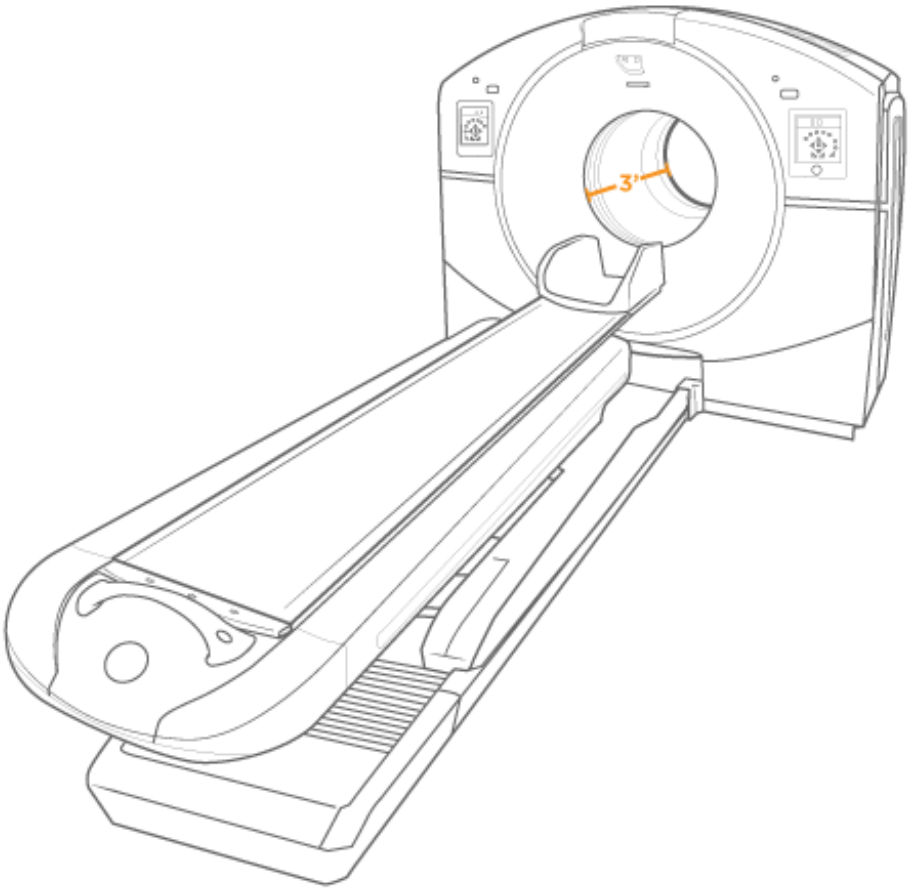

Figure 1. PET-CT machine

Once you're on the scanning table, the table will move slowly through the scanning ring. You must lie very still until your scan is done. This can take 15 to 45 minutes, depending on the type of scan you're having.

If you're also scheduled for a diagnostic CT scan, you'll get a contrast infusion through your IV or CVC. An infusion is when medicine is slowly put into your bloodstream. This will happen after your technologist takes the first series of pictures.

To learn more, read . *Computed Tomography (CT) Scan*

(www.mskcc.org/pe/ct-scan)

What to do after your PET-CT with FDG tracer

You can leave as soon as your scan is done, unless you have other tests or procedures scheduled. You'll get a card stating you had a test with a radioactive tracer and your test date. Keep this card with you because some security equipment can find radioactivity until it leaves your body. This should take less than a day.

Remember to stay hydrated after your scan. Drink water and other liquids throughout the rest of the day to help remove the tracer from your body. You can go back to your normal diet right away, unless you're given other instructions.

It is safe to be around people who are older than 18 years old. You can spend time near others, kiss, hug, hold, and touch them.

For 1 hour after your scan:

- Do not hold (have skin-to-skin contact with) a pregnant person or anyone younger than 18 years old.
- Do not sleep in the same bed with a pregnant person or anyone younger than 18 years old.

Instructions for people who are breastfeeding

Stop breastfeeding for 4 hours after your scan. You can still express (pump) milk during that time.

You can then either:

- Throw away the pumped milk.
- Store the pumped milk for 4 hours. After that, it's safe to give to the baby.

During this time, you can feed the baby with formula or milk that was expressed before the scan.

Getting your results

A radiologist will read your scan and send your results to your doctor. If your PET-CT was done to find cancer cells, your doctor should have your results in 2 business days. Ask your doctor how they will share your results with you. If your PET-CT was done to plan your treatment, your doctor will use the images to plan your care.

When to call your care team

Watch the insertion site (where the IV went into your body) for 48 hours (2 days) after your scan. Call your care team if you notice any changes in the area, such as:

- Pain or a burning feeling
- Redness or other skin color changes

- Swelling
- Broken skin
- Blisters or liquid draining
- Numbness, tingling, or other changes in sensation (feeling)
- Warm or hot skin

You do not need to do this if you got the tracer through your CVC.

Contact information

If you have any questions or concerns, call the Molecular Imaging and Therapy Service (MITS, or the Nuclear Medicine service) at 212-639-6652. You can reach a staff member Monday through Friday from 9 a.m. to 5 p.m. After 5 p.m., during the weekend, and on holidays, call 212-639-2000.

For people getting anesthesia

Follow these instructions if you are getting anesthesia during your PET-CT.

What to do the day before your PET-CT

Arrange for someone to take you home

You must have a responsible care partner take you home after your procedure. A responsible care partner is someone who can help you get home safely. They should be able to contact your care team if they have any concerns. Make sure to plan this before the day of your procedure.

If you don't have a responsible care partner to take you home, call one of the agencies below. They'll send someone to go home with you. There's a charge for this service, and you'll need to provide transportation. It's OK to use a taxi or car service, but you still need a responsible care partner with you.

Agencies in New York	Agencies in New Jersey
VNS Health: 888-735-8913	Caring People: 877-227-4649
Caring People: 877-227-4649	

Instructions for eating

Important: If you take a GLP-1 medicine, do not follow these instructions. Follow the instructions in *Eating and Drinking Before Your Surgery or Procedure When Taking GLP-1 Medicines* (www.mskcc.org/pe/eat-drink-glp1) instead.

Stop eating at midnight (12 a.m.) the night before your surgery or procedure. This includes hard candy and gum.

Your healthcare provider may have given you different instructions for when to stop eating. If so, follow their instructions. Some people need to fast (not eat) for longer before their surgery or procedure.

What to do the day of your PET-CT
Instructions for drinking

> **Important:** If you take a GLP-1 medicine for weight loss, do not follow these instructions. Follow the instructions in *Eating and Drinking Before Your Surgery or Procedure When Taking GLP-1 Medicines* (www.mskcc.org/pe/eat-drink-glp1) instead.

Between midnight (12 a.m.) and 6 hours before your arrival time, only drink the liquids on the list below. Do not eat or drink anything else.

- Water.
- Clear apple juice, clear grape juice, or clear cranberry juice.
- Gatorade or Powerade.
- Black coffee or plain tea. It's OK to add sugar. Do not add anything else.
  - Do not add any amount of any type of milk or creamer. This includes plant-based milks and creamers.
  - Do not add honey.
  - Do not add flavored syrup.

If you have diabetes, pay attention to the amount of sugar in these drinks. It will be easier to control your blood sugar levels if you include sugar-free, low-sugar, or no added sugar versions of these

drinks.

6 hours before your arrival time, do not drink anything except water.

It's helpful to stay hydrated before surgery, so drink if you are thirsty. Do not drink more than you need. You will get intravenous (IV) fluids during your surgery.

Stop drinking 2 hours before your arrival time. This includes water.

For more resources, visit www.mskcc.org/pe to search our virtual library.

About Your PET-CT with FDG Tracer - Last updated on March 26, 2026

All rights owned and reserved by Memorial Sloan Kettering Cancer Center